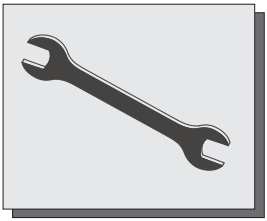

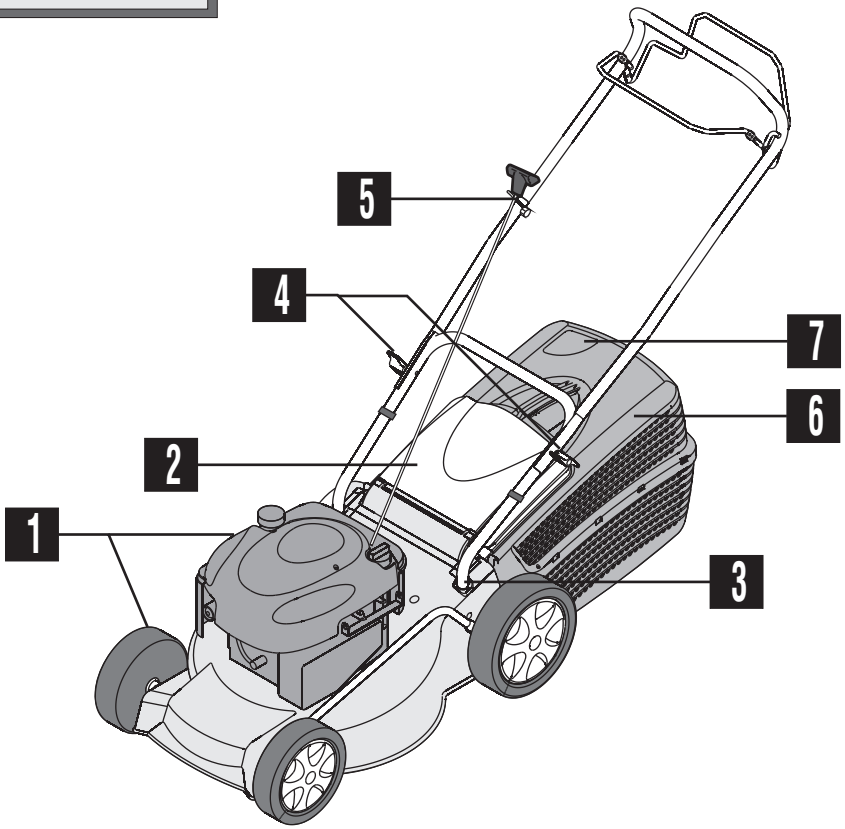
5
4
7
6
2
1
3

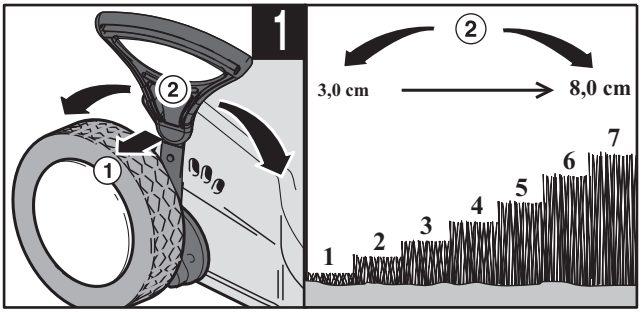
1
2
1
2
3,0 cm
8,0 cm
1
2
3
4
5
6
7

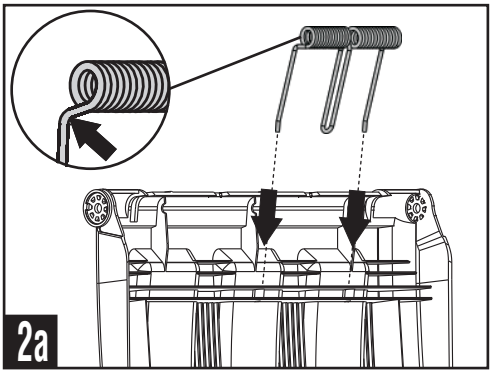
2a

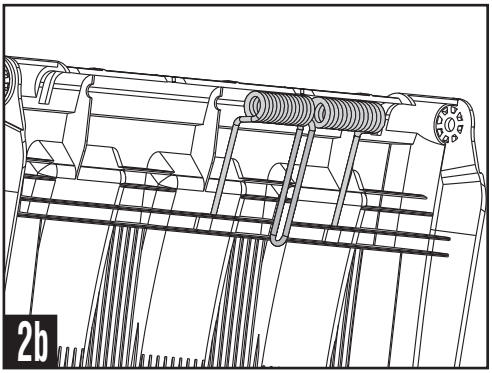
2b

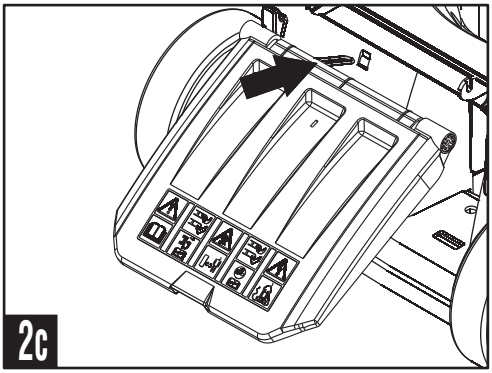
2c

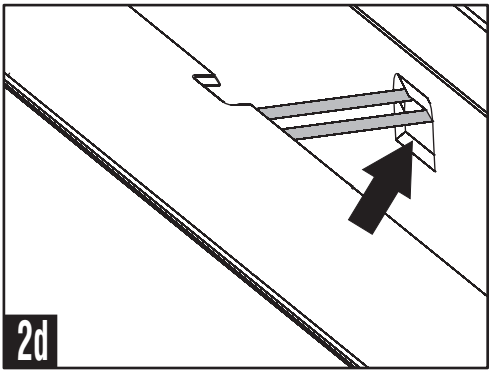
2d

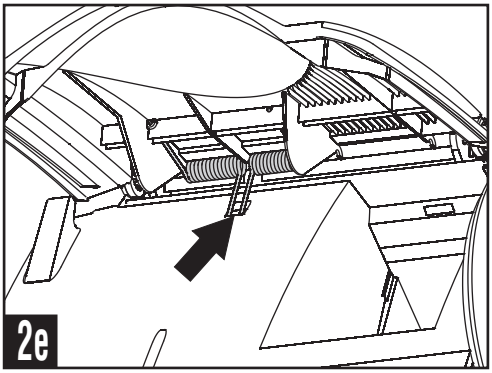
2e

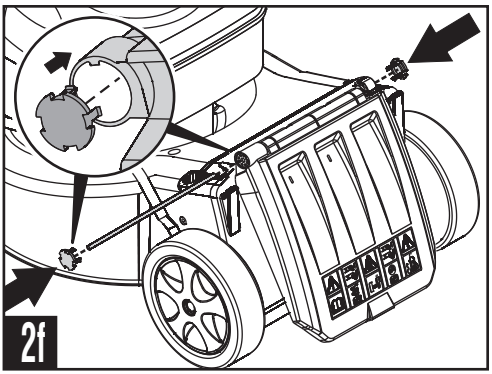
2f

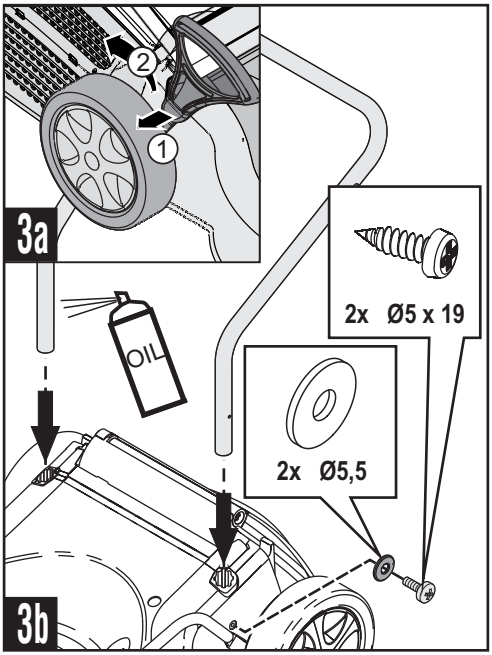
2
1
3a
OIL
2x Ø5 x 19
2x Ø5,5
3b

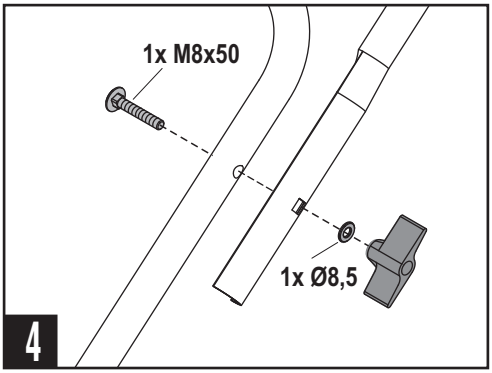
1x M8x50
1x Ø8,5
4

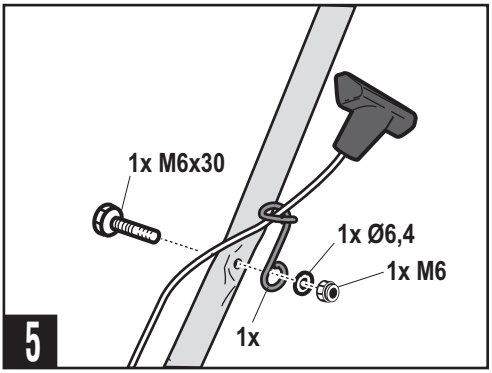
1x M6x30
1x Ø6,4
1x M6
1x
5

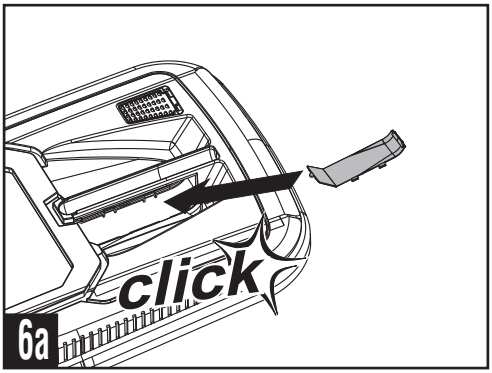
click
6a

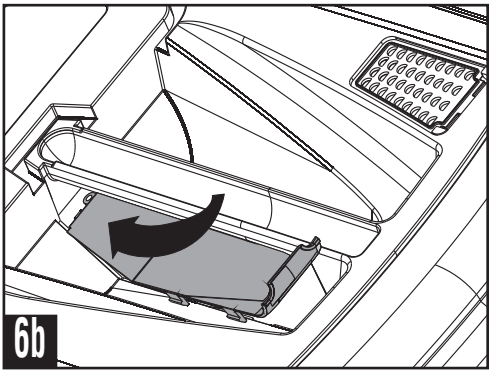
6b

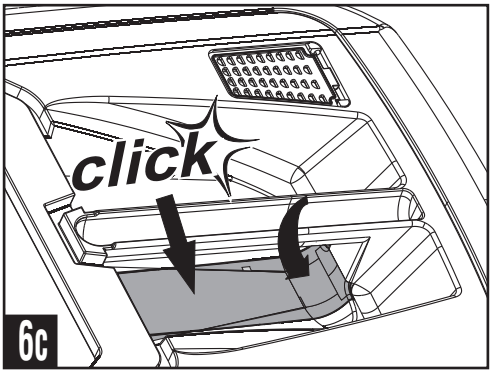
click
6c

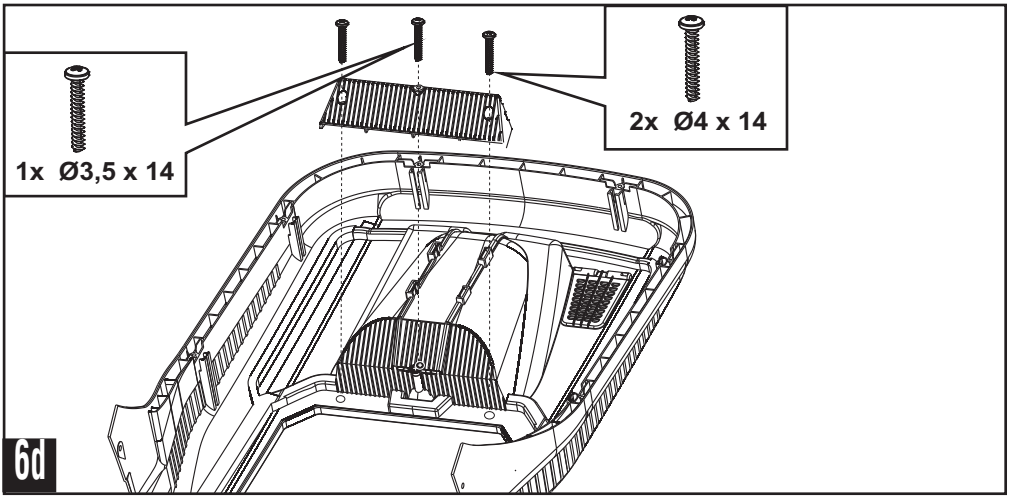
1x Ø3,5 x 14
2x Ø4 x 14
6d

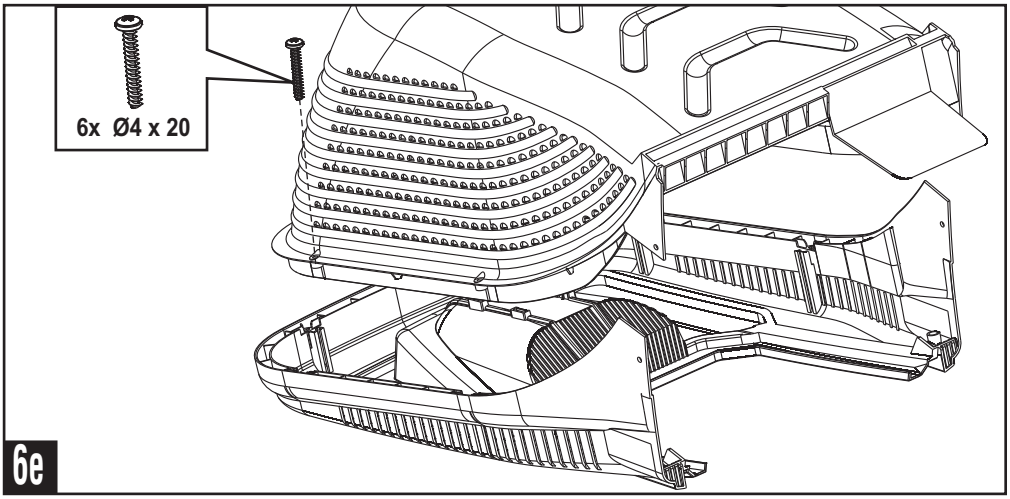
6x Ø4 x 20
6e

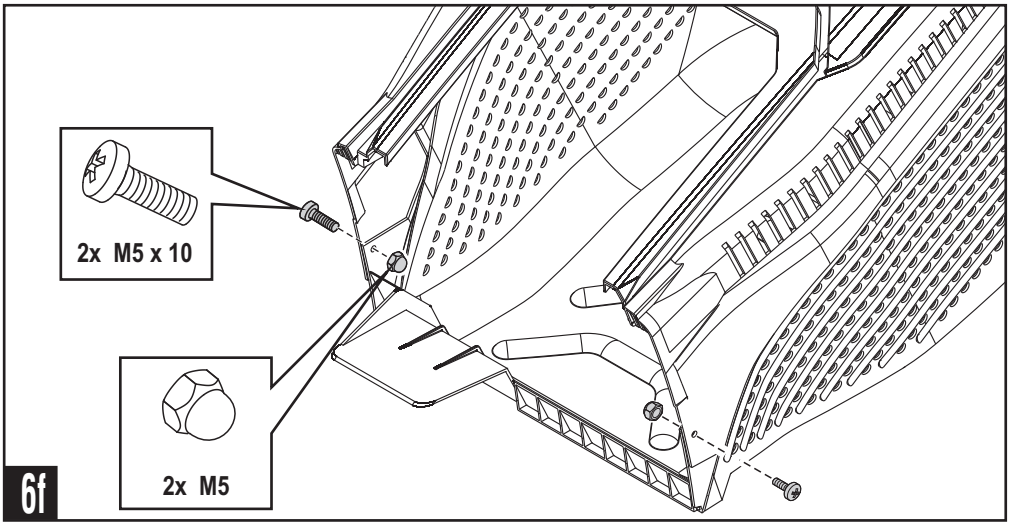
2x M5 x 10
2x M5
6f

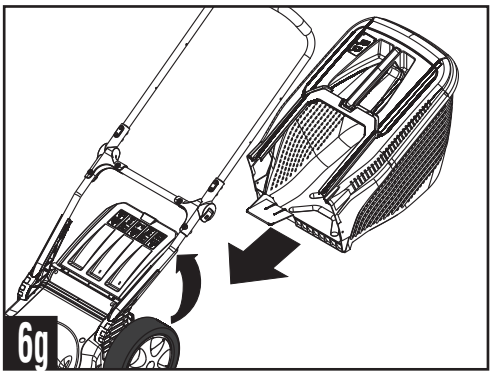
6g

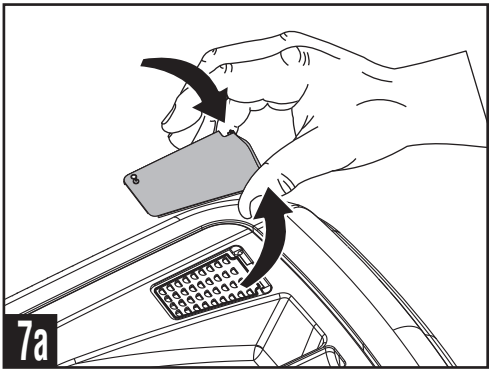
7a

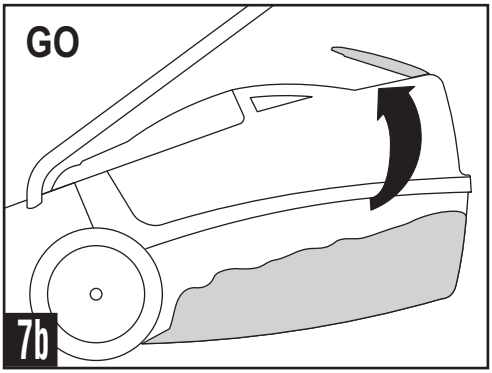
GO
7b

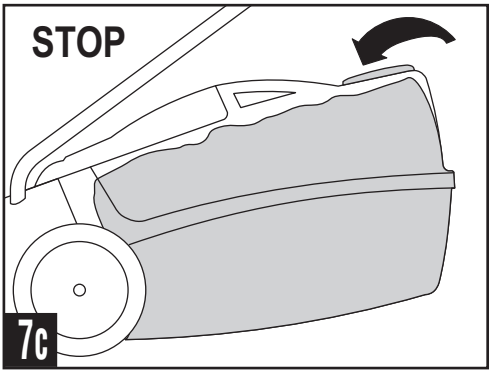
STOP
7c